DESIGN + ENGINEERING
GROHE GERMANY

99.0586.031/ÄM 236074/05.16

www.grohe.com

Pure Freude an Wasser
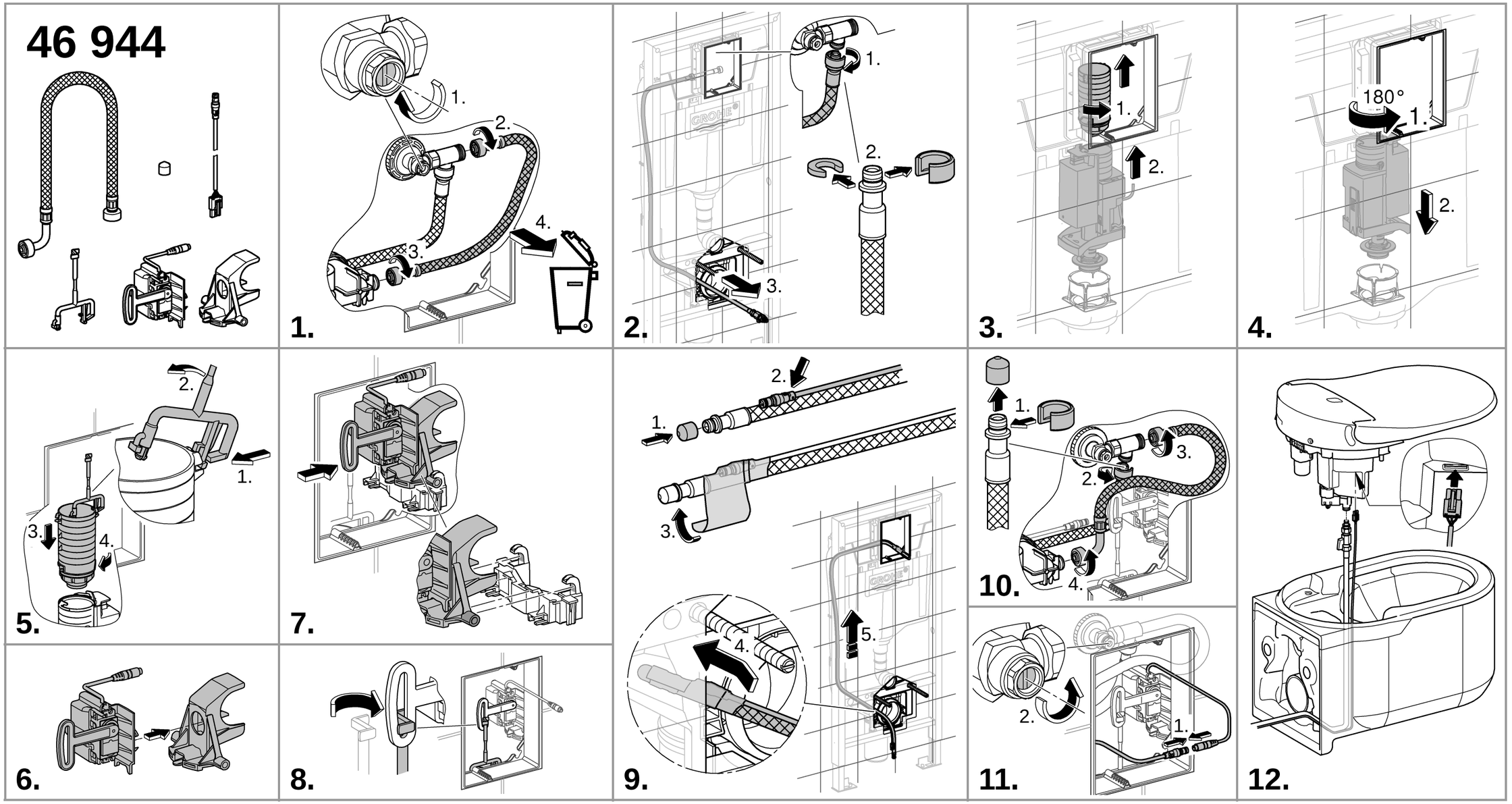
GROHE