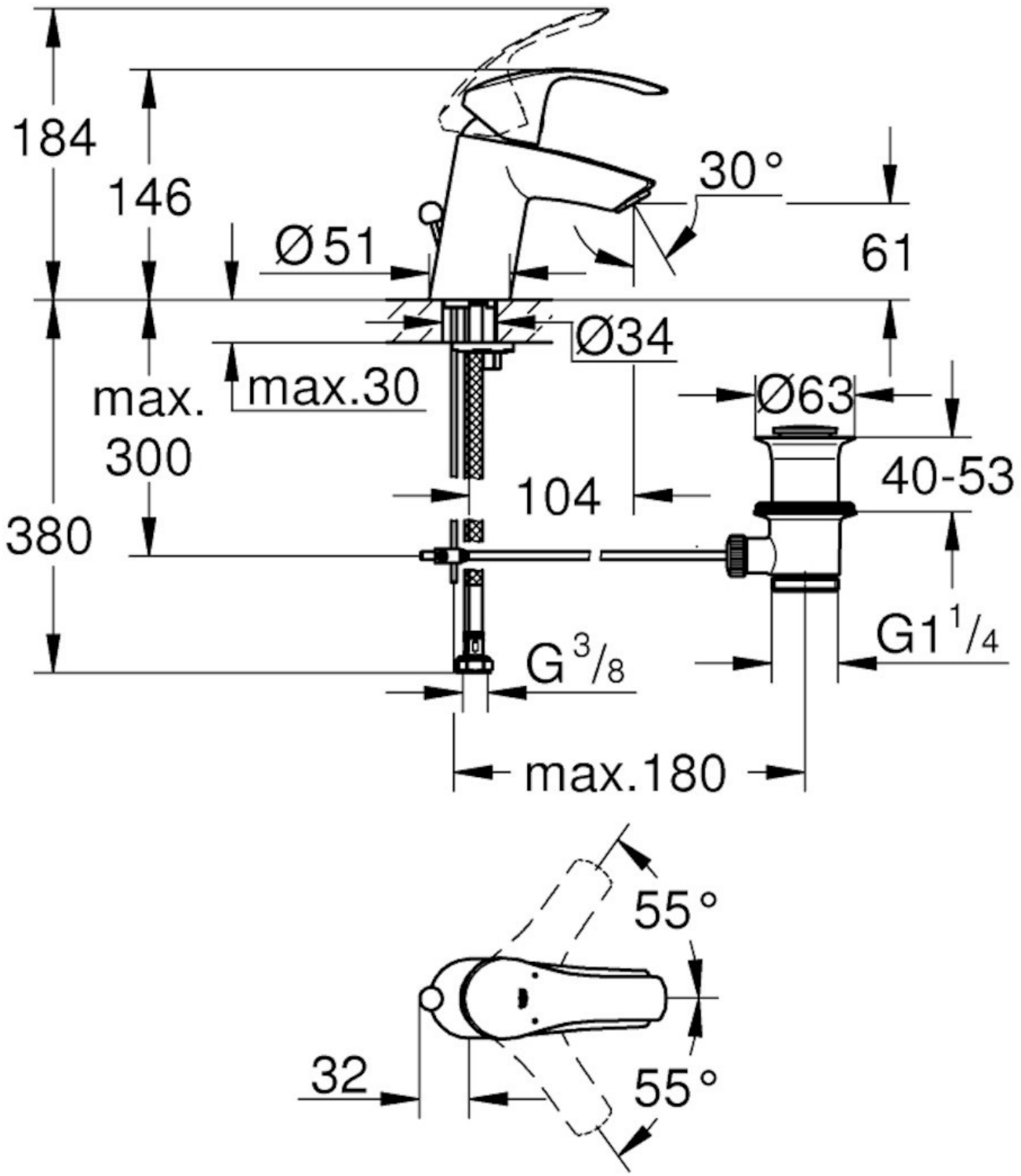
184
146
30°
Ø51
61
Ø34
max.30
max.
300
Ø63
40-53
104
380
G1 1/4
G 3/8
max.180
55°
32
55°