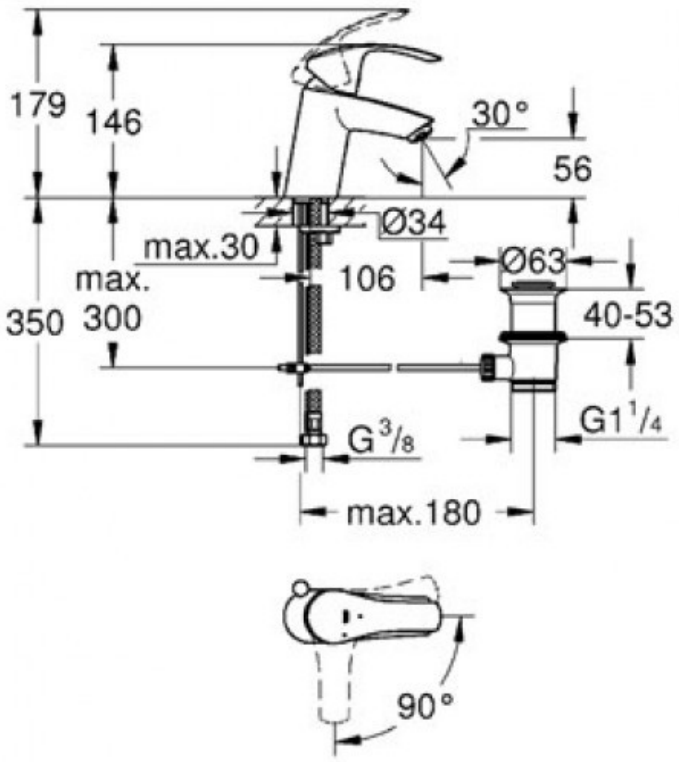
179
146
30°
56
Ø34
max.30
max.
300
350
106
Ø63
40-53
G3/8
G1 1/4
max.180
90°