Swiss Aqua Technologies

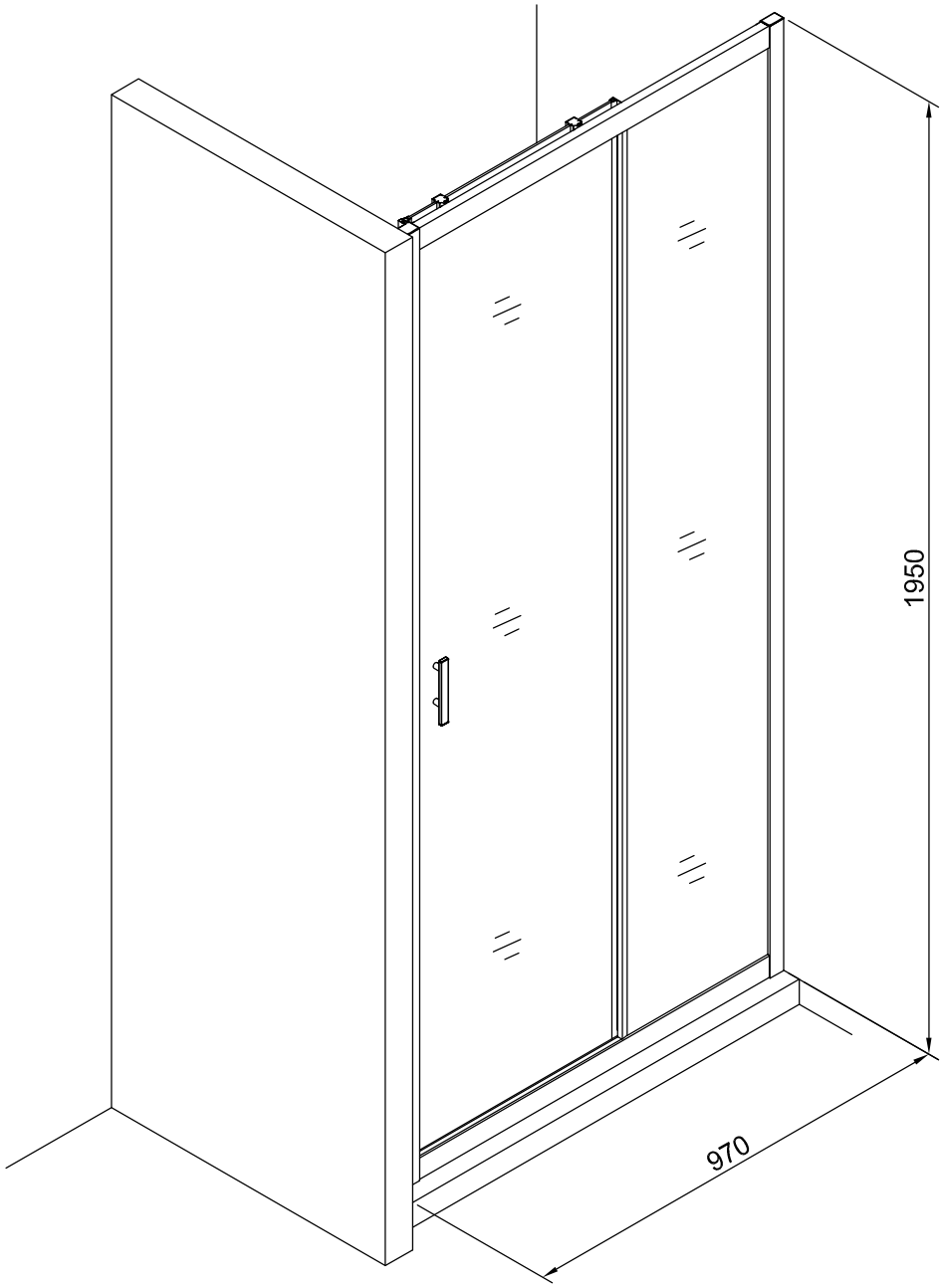

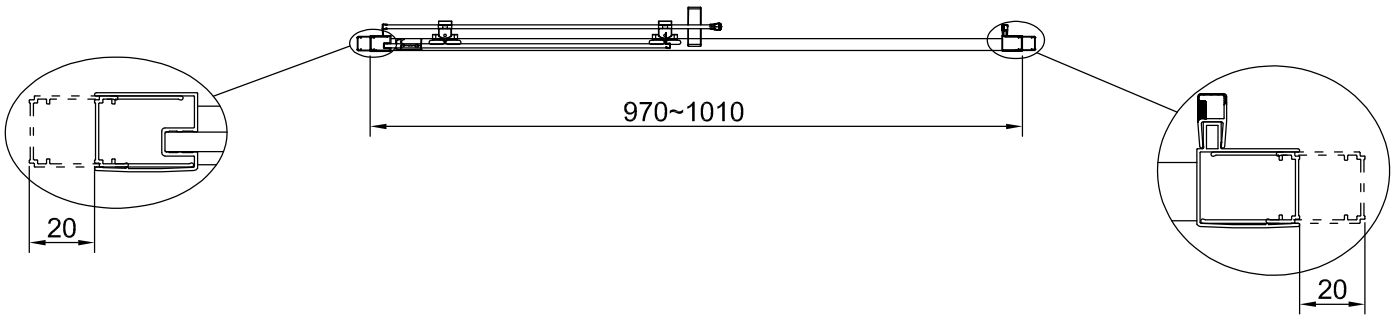
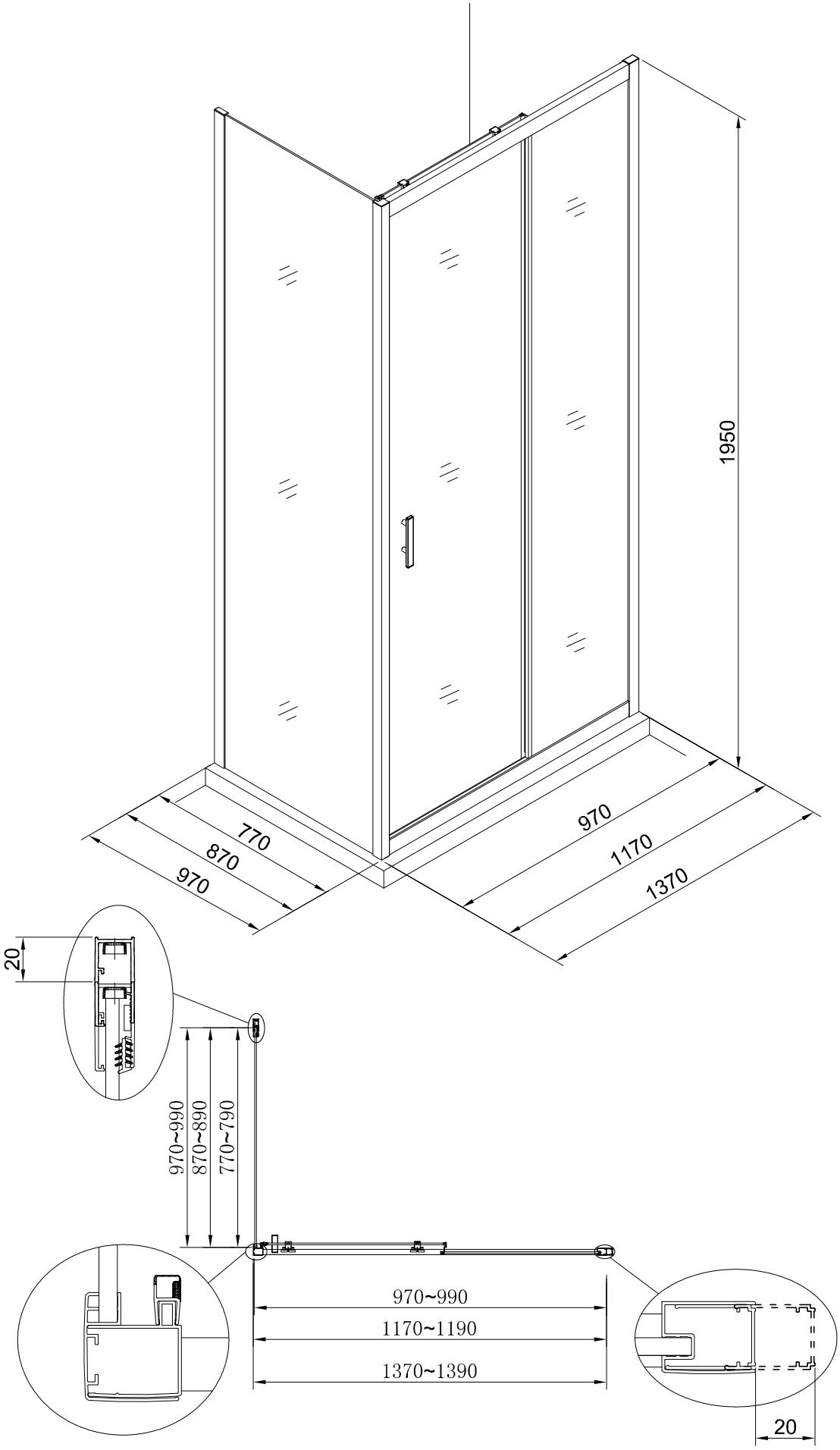
Swiss Aqua Technologies