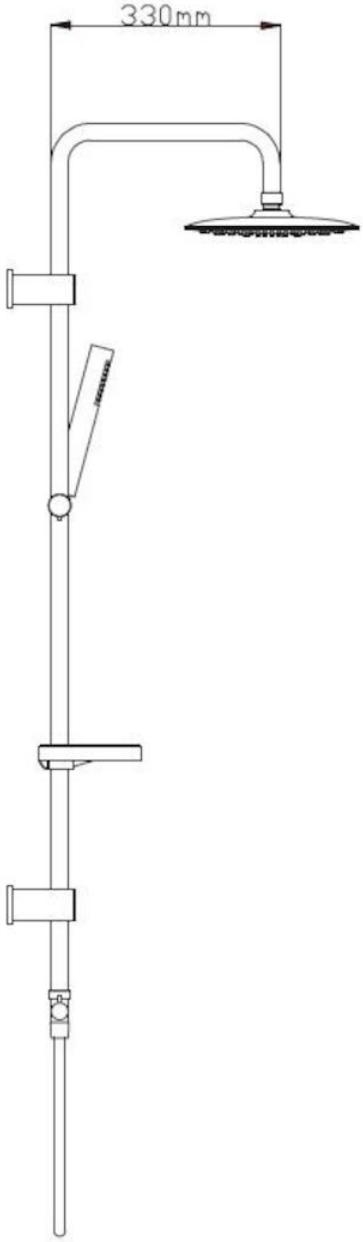
330mm

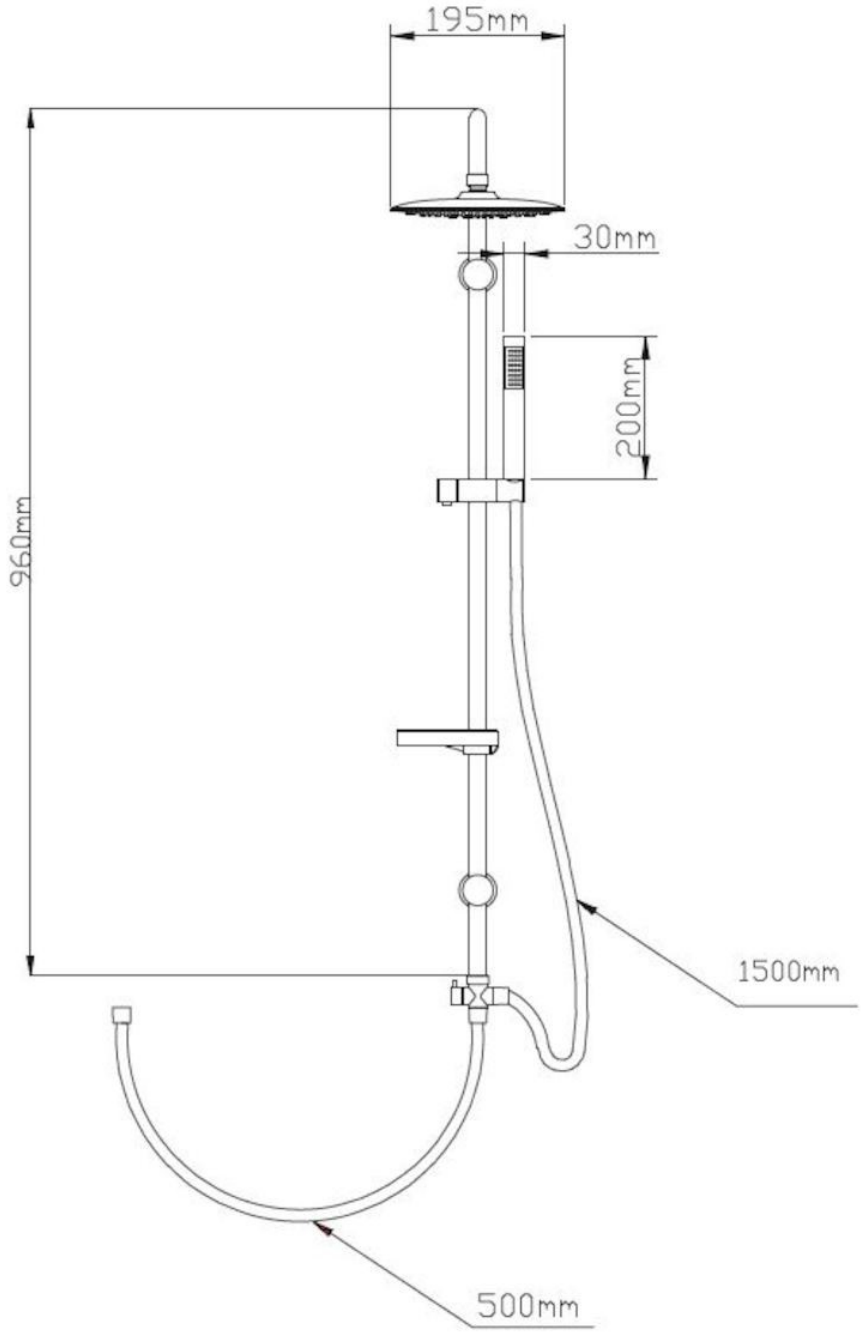
195mm
30mm
200mm
960mm
1500mm
500mm