Swiss Aqua Technologies

SWP+SWR

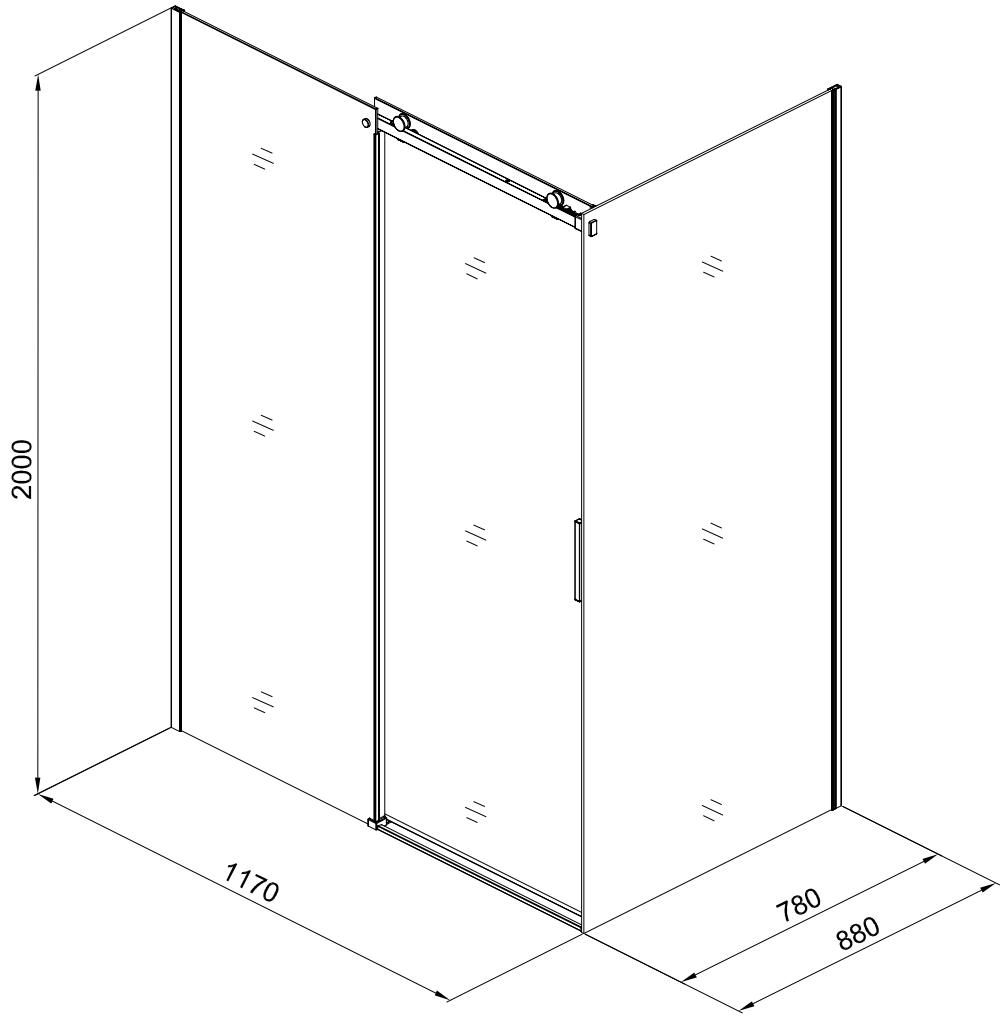

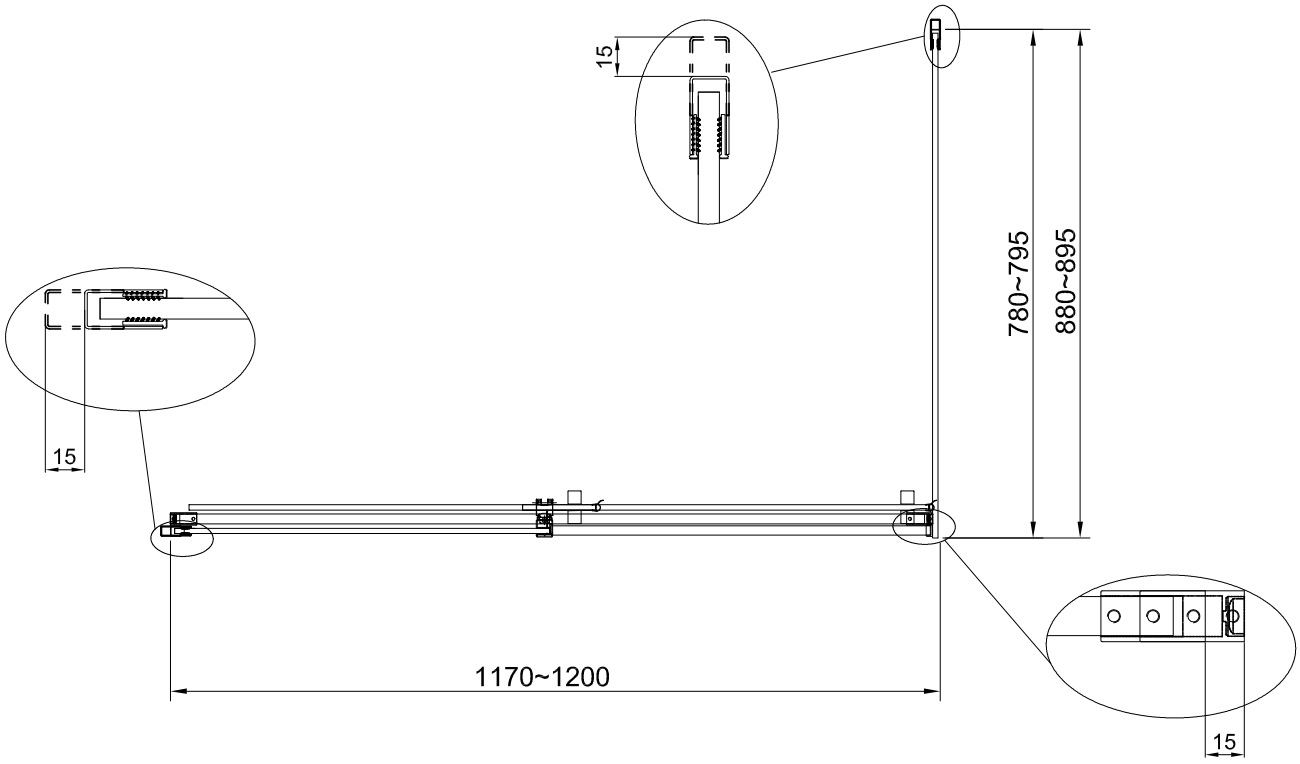
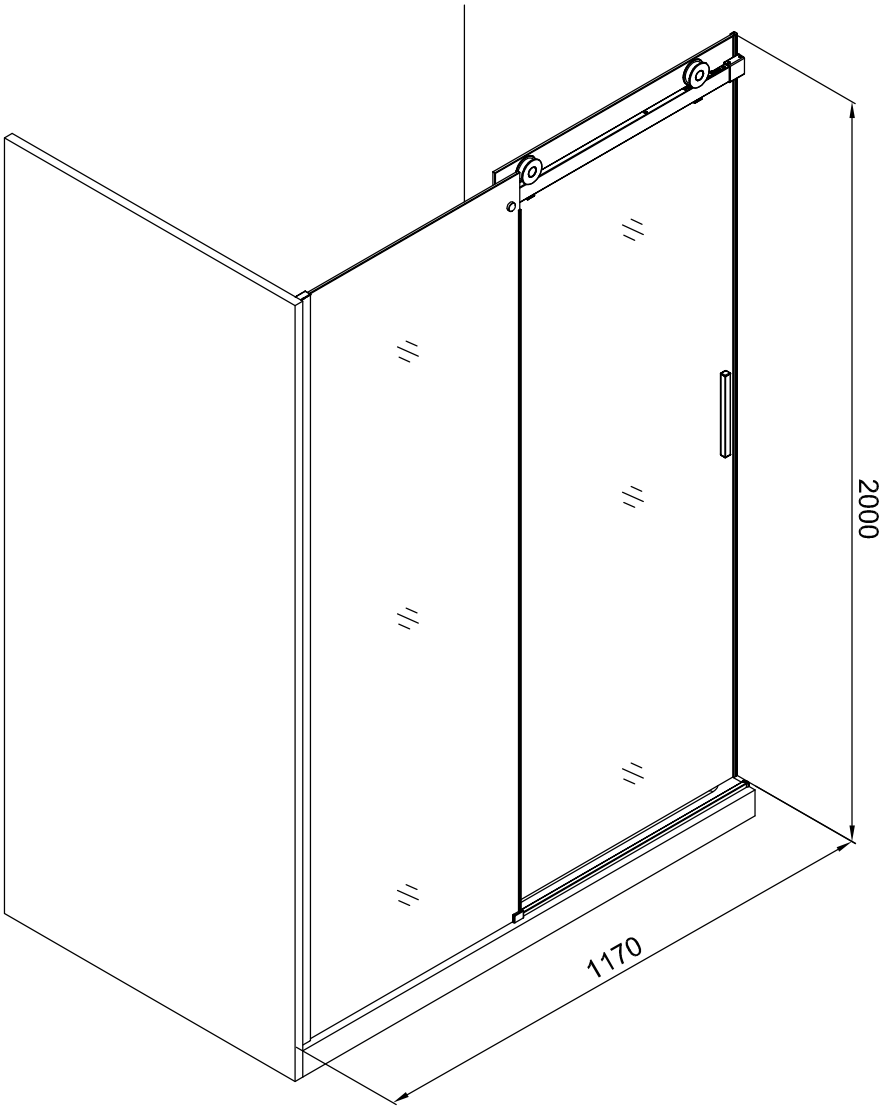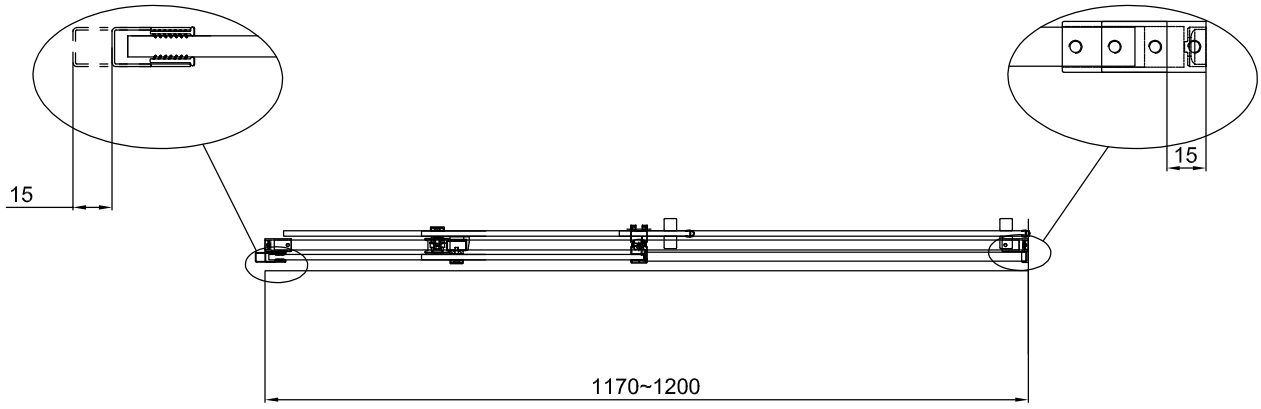
Swiss Aqua Technologies