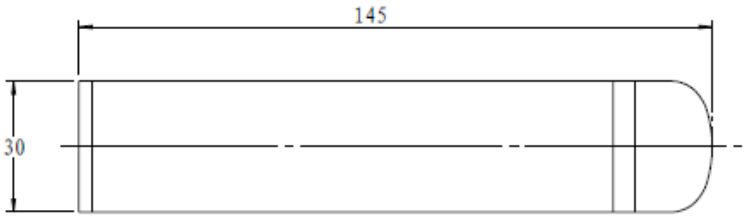

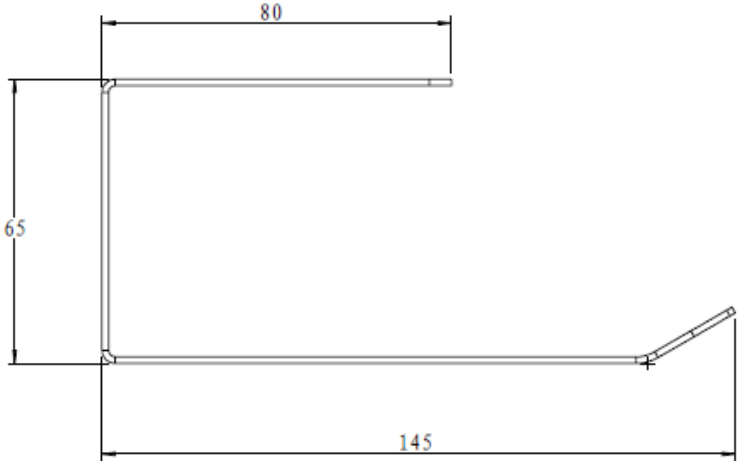

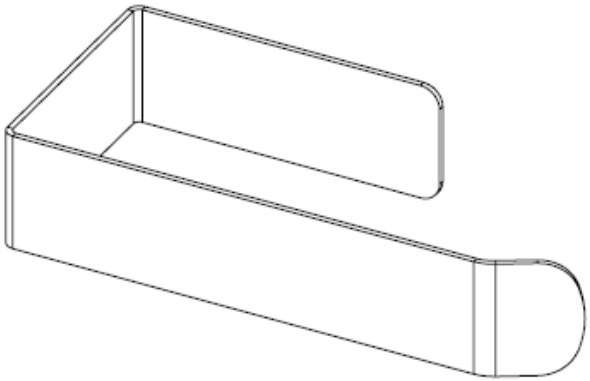

SAT