AUSTEN120CBBU
AUSTEN120LPBU

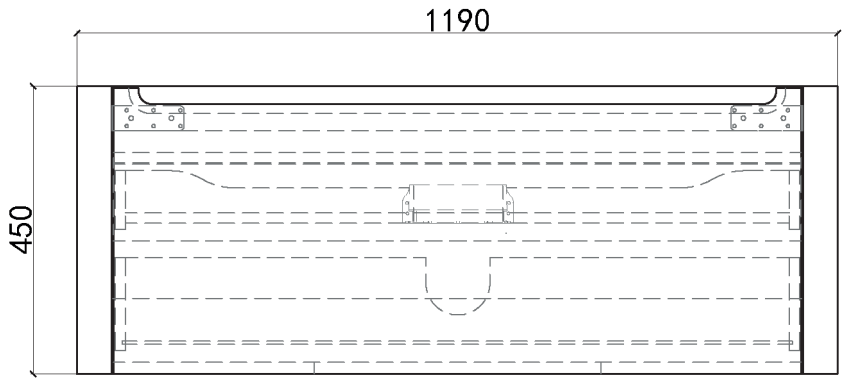

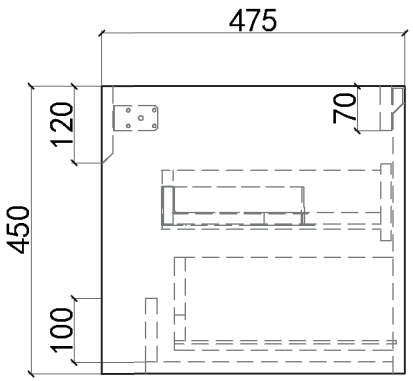

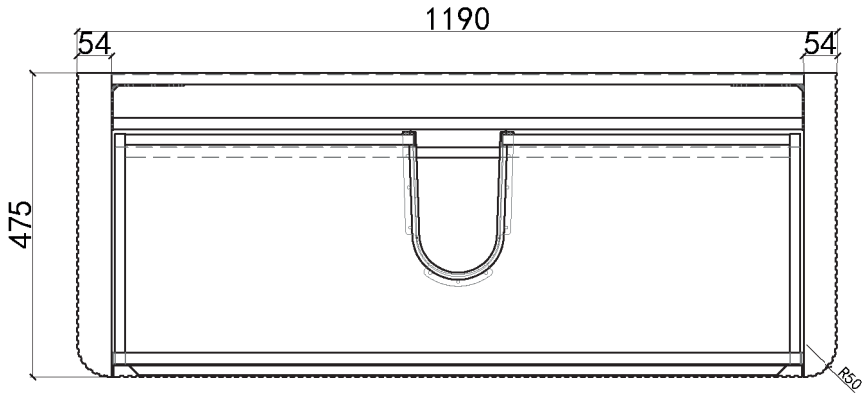

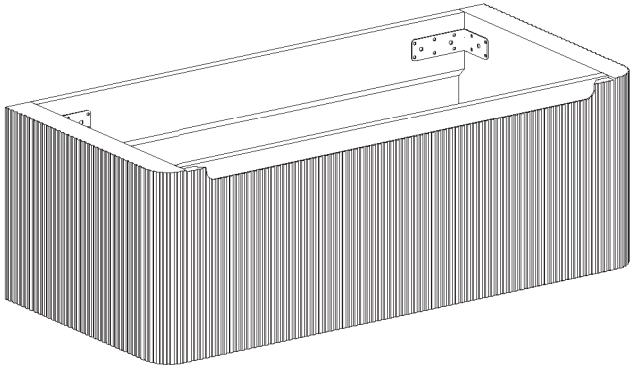

SAT