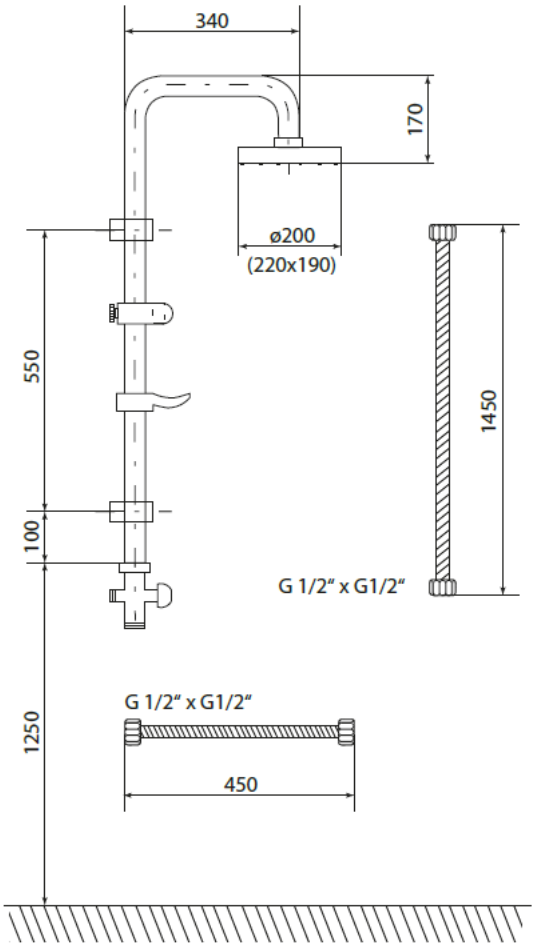
340
170
ø200
(220x190)
550
100
1250
1450
G 1/2" x G1/2"
G 1/2" x G1/2"
450

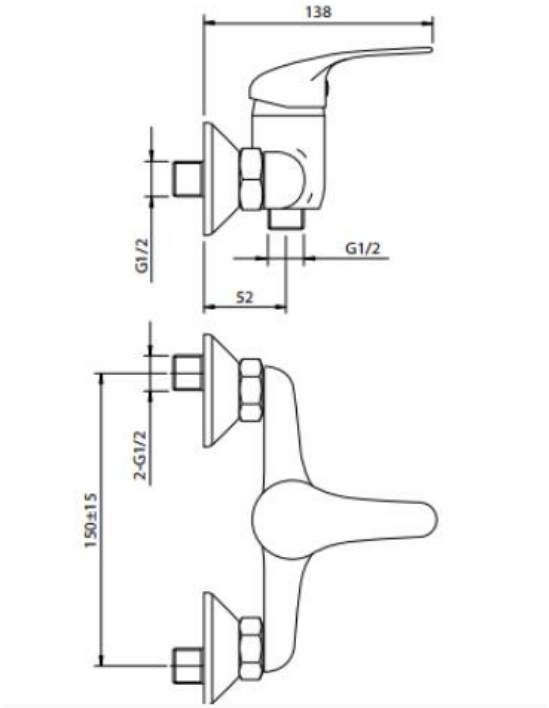
138
G1/2
G1/2
52
2-G1/2
150±15