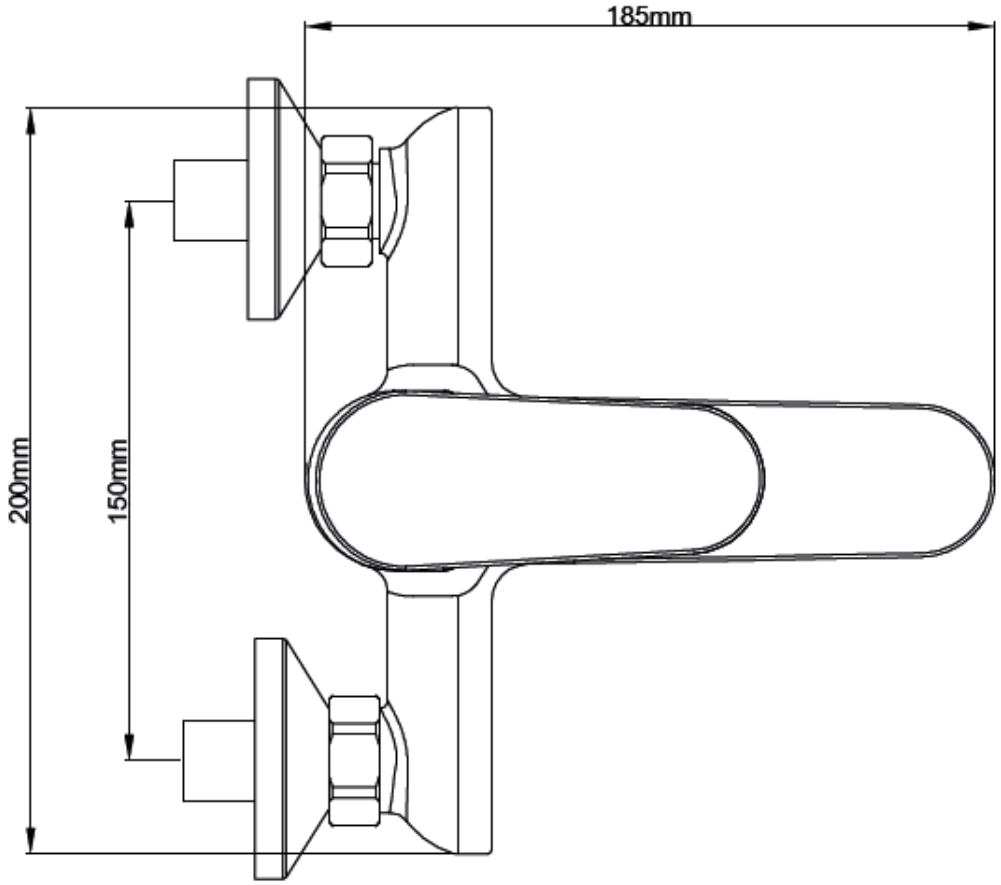
185mm
200mm
150mm

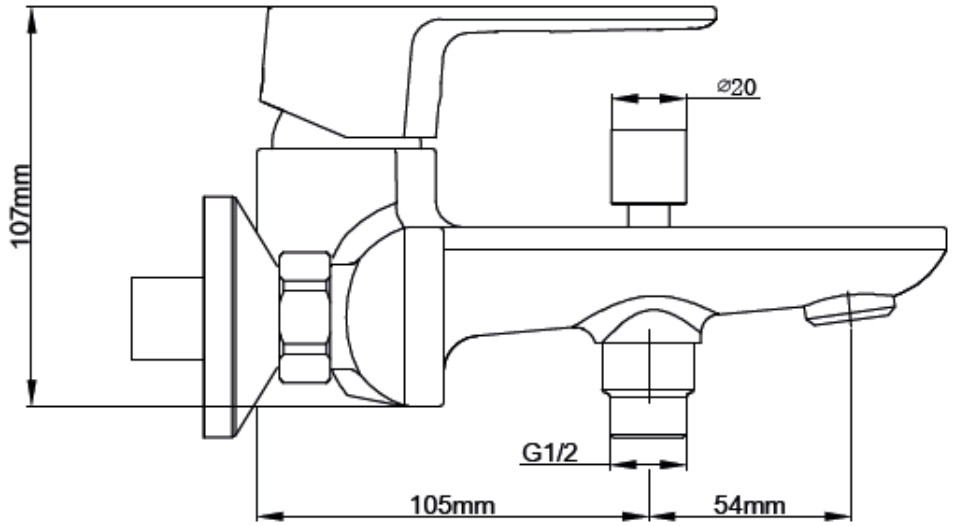
107mm
⌀20
G1/2
105mm
54mm