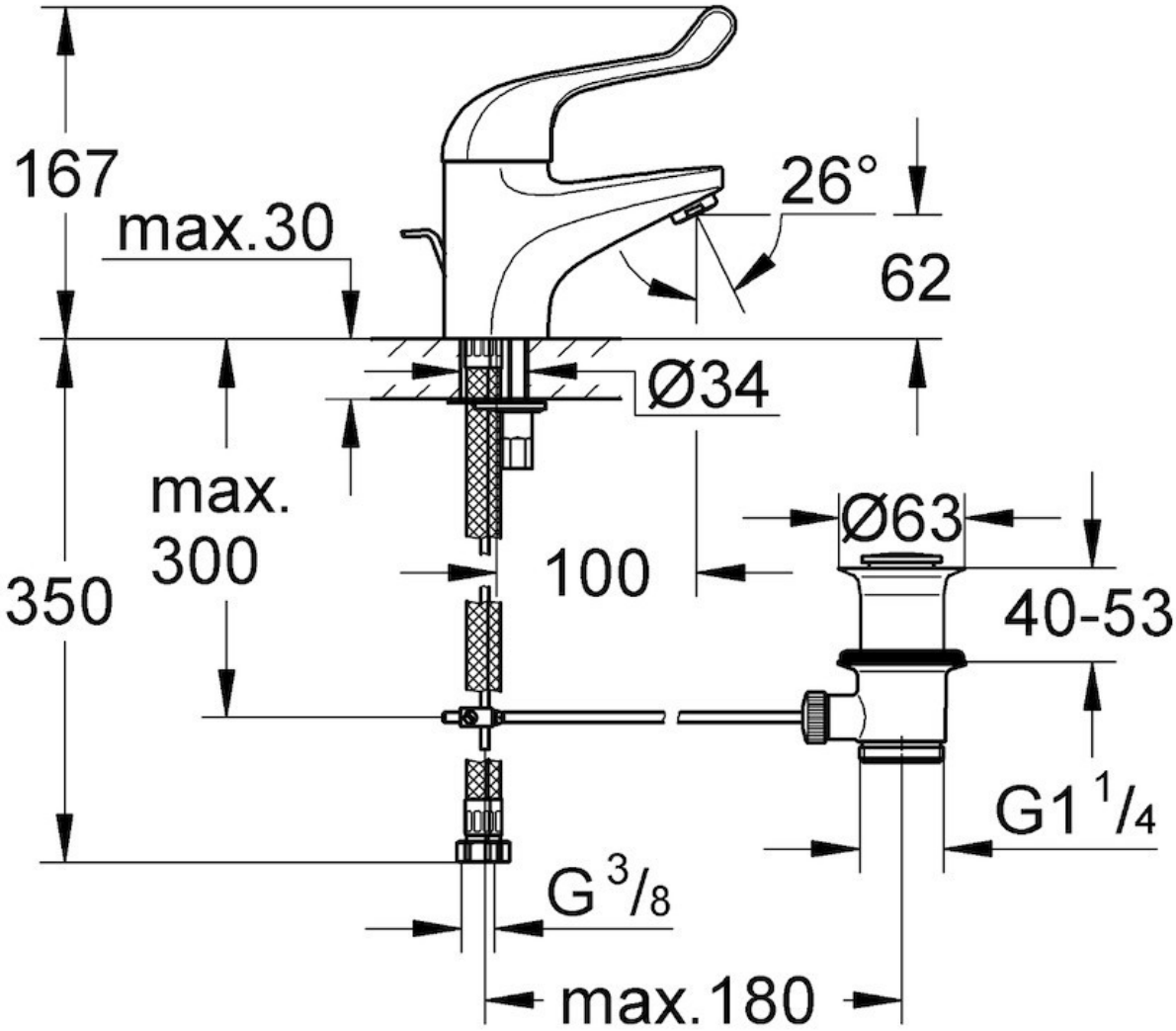
167
max.30
26°
62
Ø34
max.
300
350
100
Ø63
40-53
G1 1/4
G 3/8
max.180

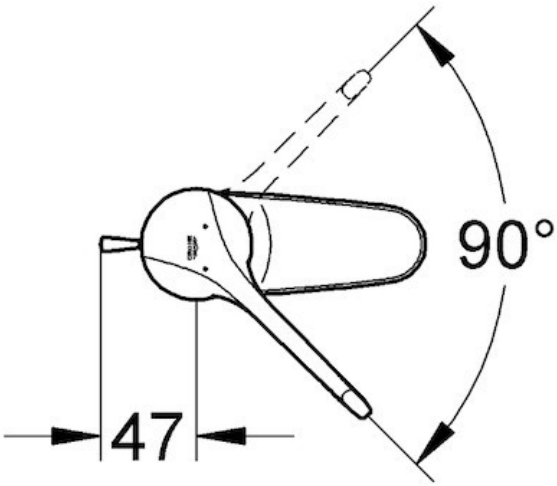
90°
47