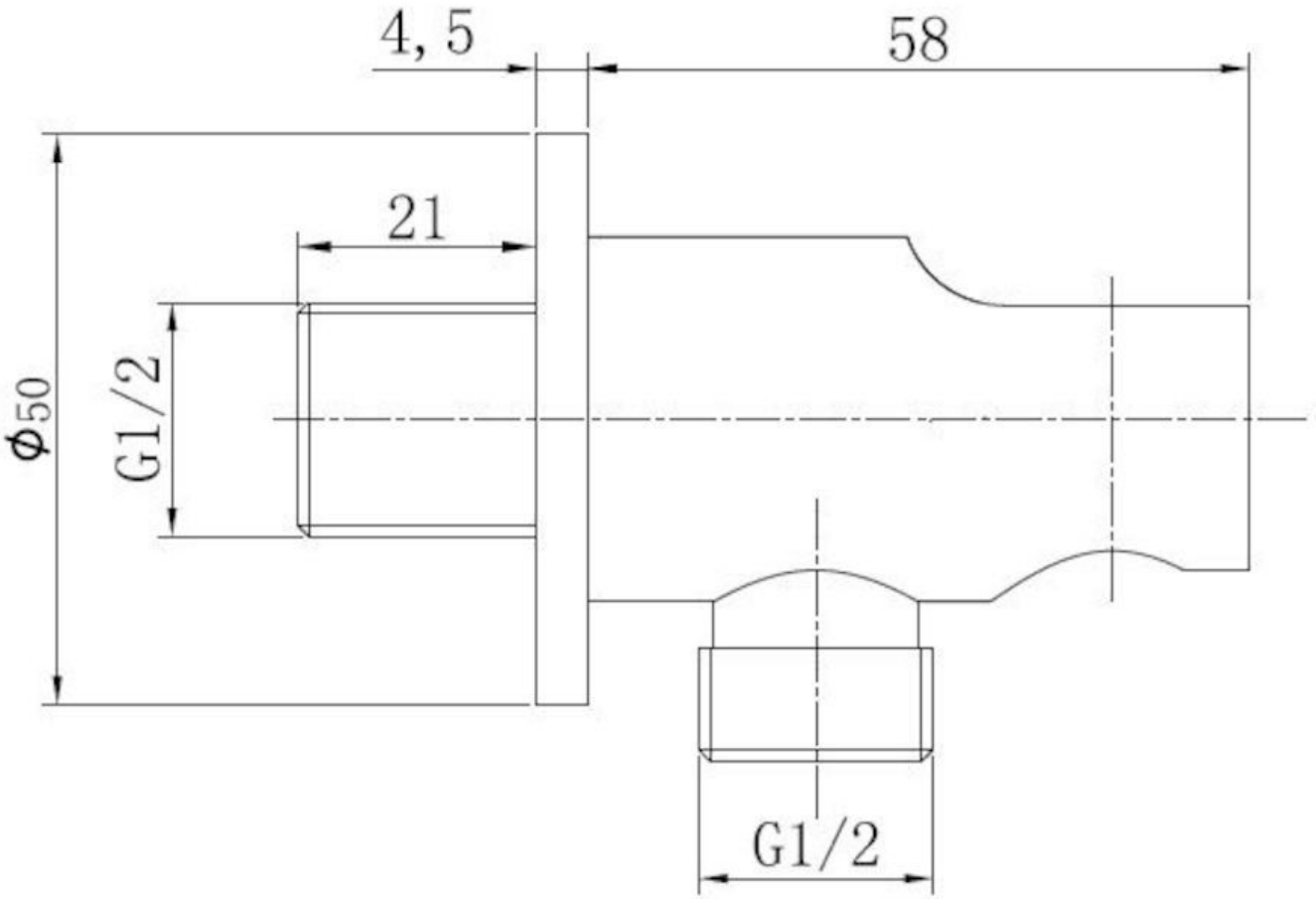
4, 5
58
21
ϕ50
G1/2
G1/2

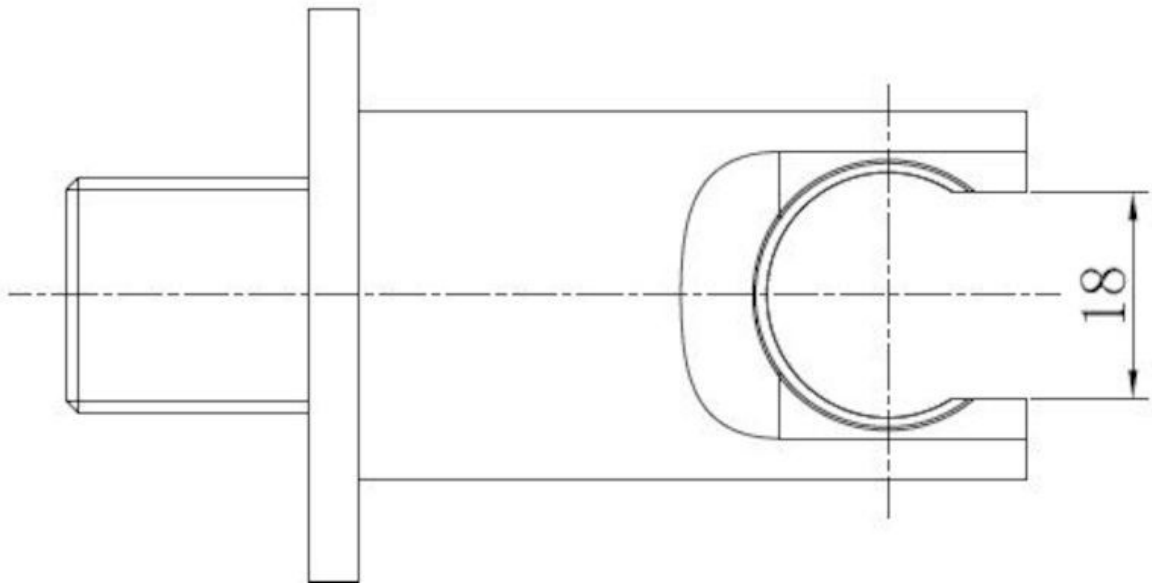
18