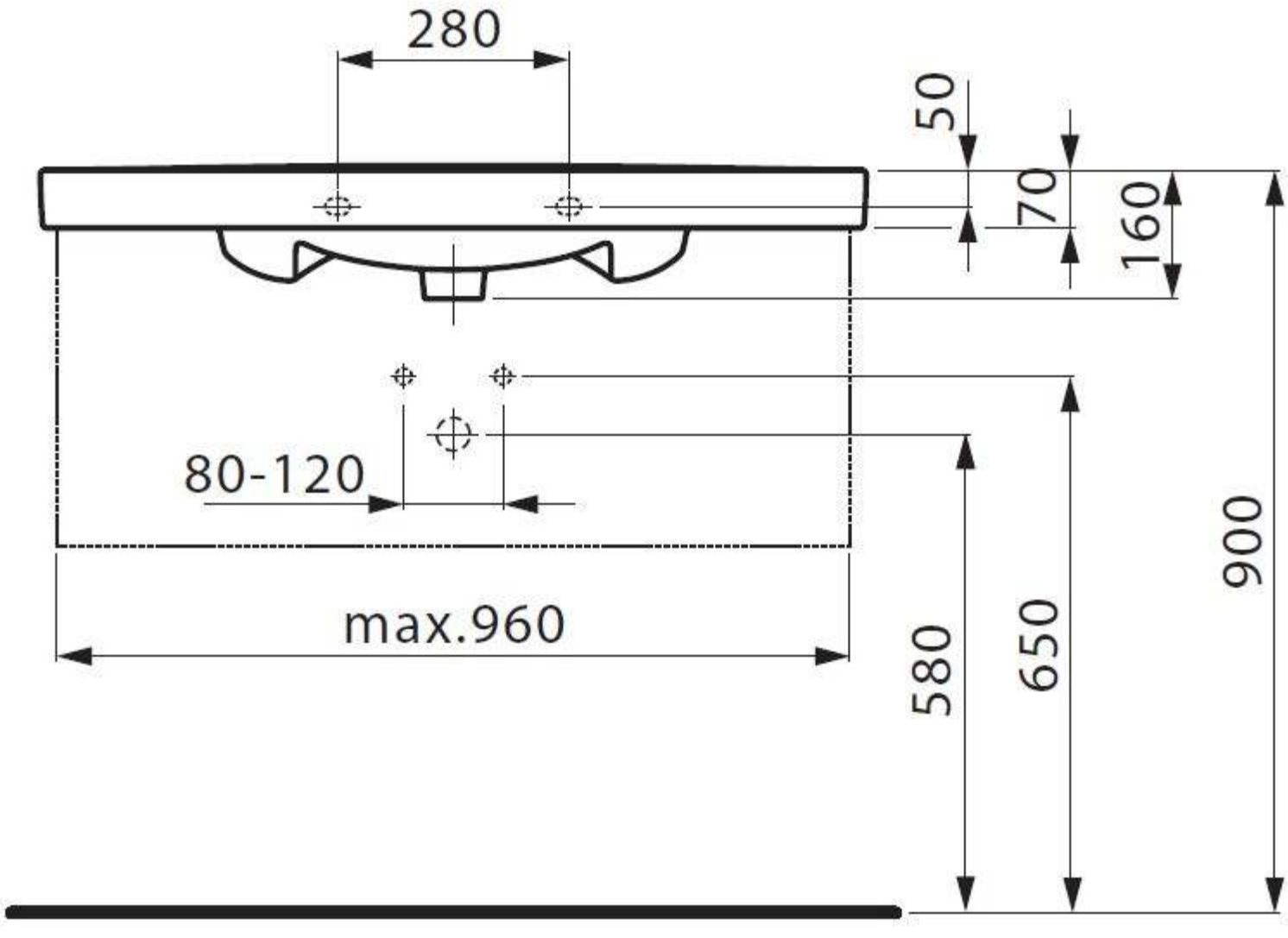
280
50
70
160
900
80-120
max.960
580
650